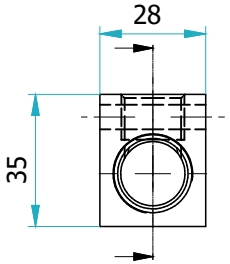

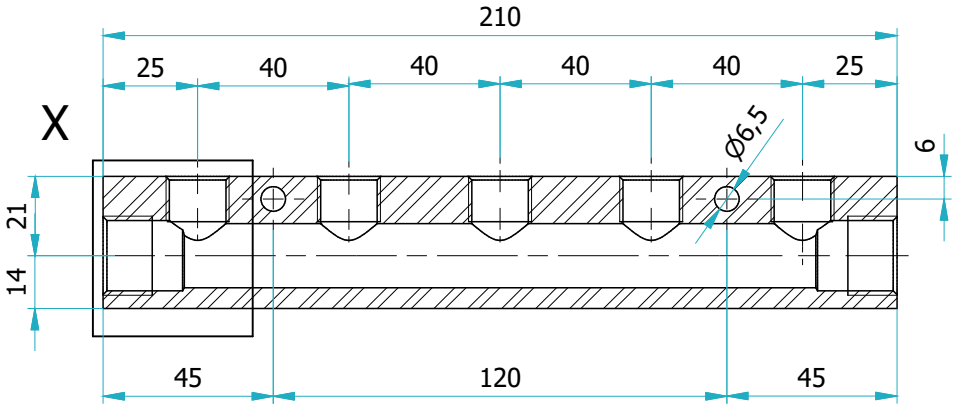

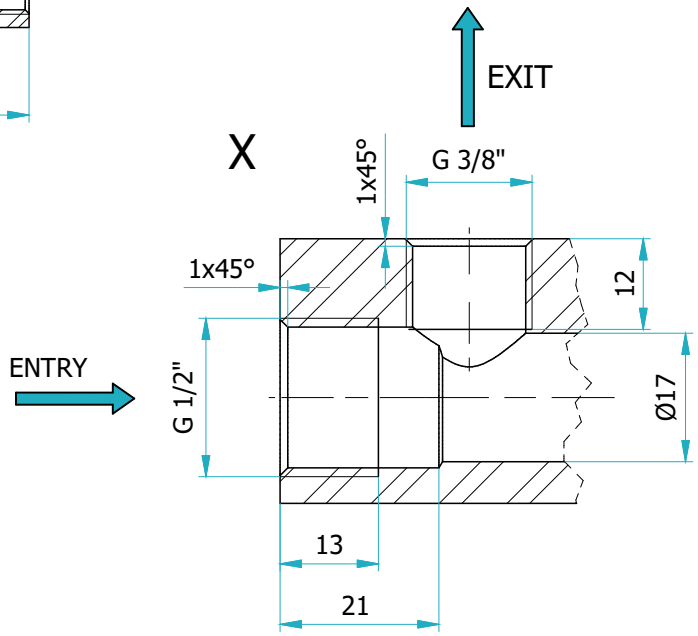

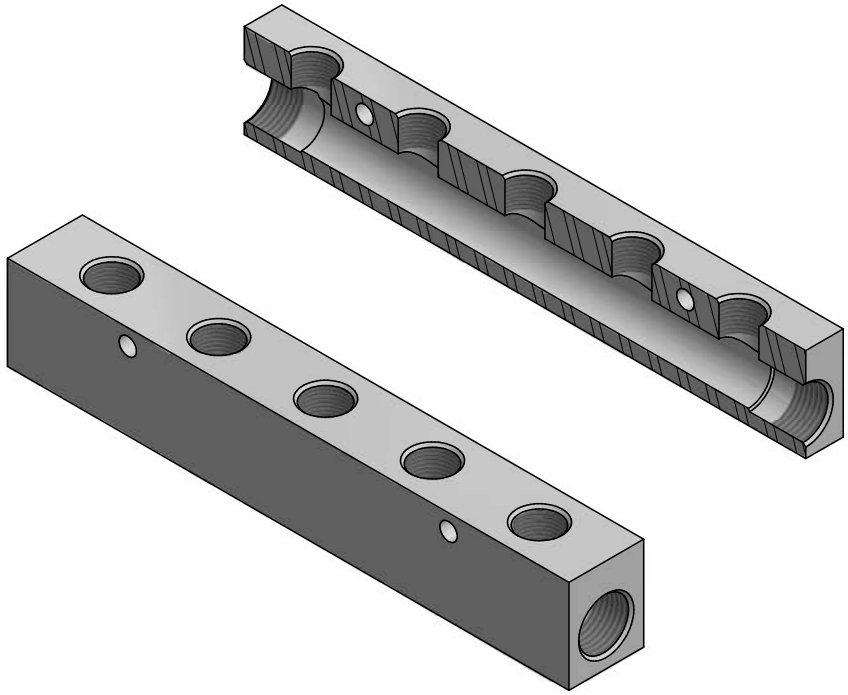

www.ifom.it	MATERIAL: ALUMINUM ALLOY 6005 (35x28)	MASS (kg): 0,385 kg	DATE: 09/07/20
THIS DRAWING, EXCLUSIVE PROPERTY OF OUR COMPANY, IS STRICTLY CONFIDENTIAL AND MUST NOT BE TRANSFERRED, IMITATED OR REPRODUCED WITHOUT OUR WRITTEN CONSENT	TREATMENT: TUMBLE FINISHING	GENERAL TOLERANCES: ±0,25	
DESCRIPTION: COLLET. SERIE LUNGA USCITE LINEARI 2 ENTRATE 1/2 5 USCITE 3/8		CODE: SL.CL.2E1/2.5U3/8	