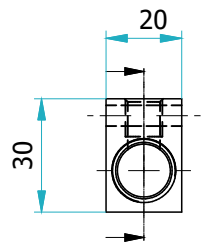

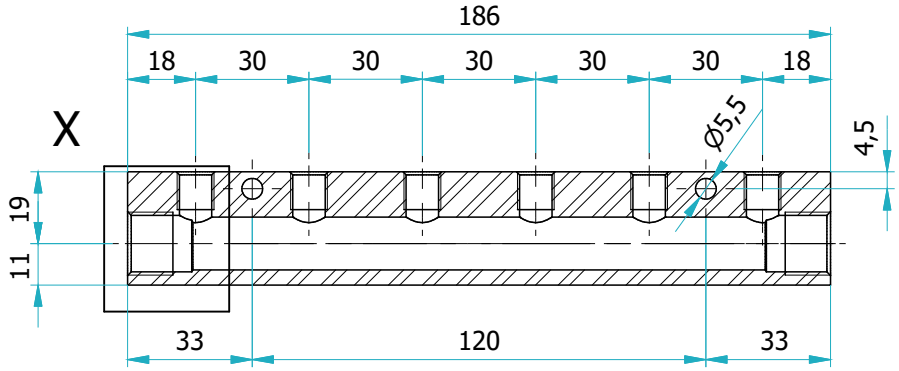

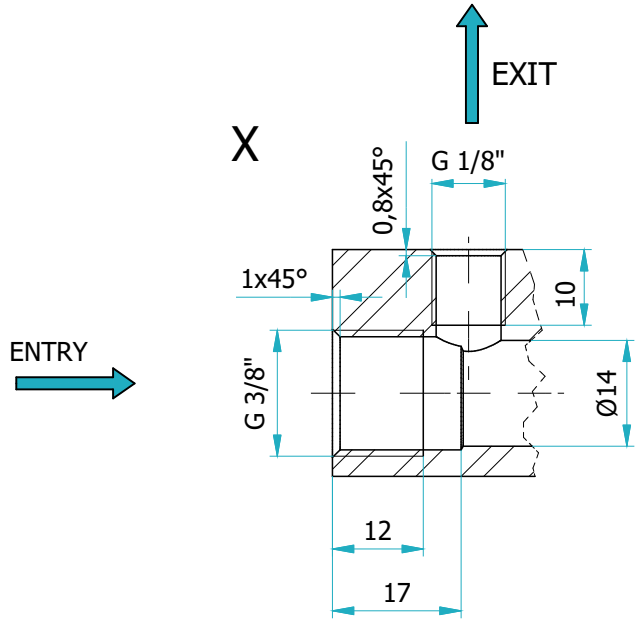

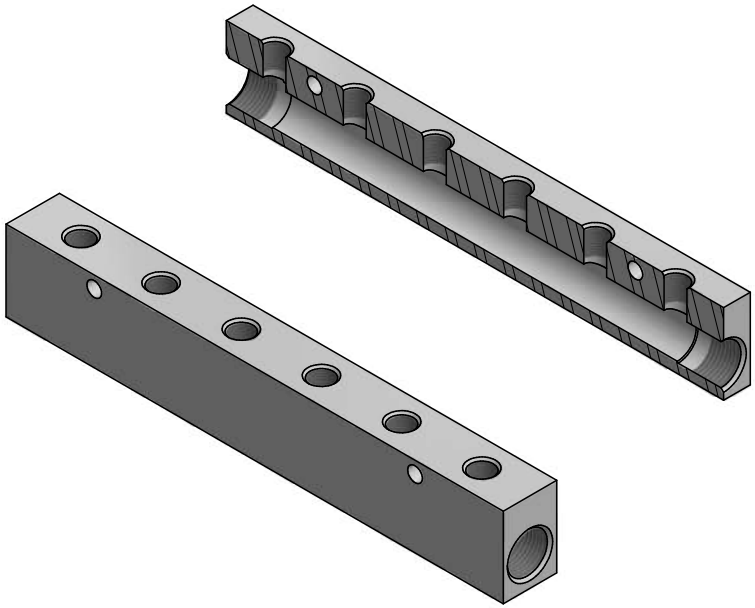

www.ifom.it	MATERIAL: ALUMINUM ALLOY 6082 (30x20)	MASS (kg): 0,208 kg	DATE: 10/07/20
THIS DRAWING, EXCLUSIVE PROPERTY OF OUR COMPANY, IS STRICTLY CONFIDENTIAL AND MUST NOT BE TRANSFERRED, IMITATED OR REPRODUCED WITHOUT OUR WRITTEN CONSENT	TREATMENT: TUMBLE FINISHING	GENERAL TOLERANCES: ±0,25	
DESCRIPTION: COLLET. SERIE LUNGA USCITE LINEARI 2 ENTRATE 3/8 6 USCITE 1/8		CODE: EVT 15306	